DIMLUX

ULTRA optics reflectors

EXPERT SERIES/MKII

DIMLUX

USER MANUAL

Engineered, Designed and Produced
in Holland

www.dimlux.nl

THE FUTURE OF GROWING
JUST GOT BRIGHTER.

DIMLUX EXPERT SERIES SPECIFICATIONS

DIMLUX EXPERT SERIES 315 Watt FULL SPECTRUM

- Available in 120V, 230V, 277V
- Dim levels: Soft-Off, 165W, 205W, 245W, 280W, 315W, 345W, 380W
- Power consumption @315W is 331W, 1.4A @230V
- Power consumption @boost 380W is 399W, 1.7A @230V
- System PPF @380W is 706µmol/s
- Weight 4.9kg (10.80lbs)
- Illumination surface:
  @315W is min 0.42m² (4.52ft²), max 1m² (10.76ft²)
  @380W is min 0.5m² (5.38ft²), max 1.2m² (12.91ft²)
- 50mm (2") connection for active extraction
- Dimensions 530x275x130mm (20.8"x10.8"x5.1")

DIMLUX EXPERT SERIES 630 Watt DUAL FULL SPECTRUM

- Available in 230V, 277V
- Also available in Nanotube version
- Dim levels: Soft-Off, 330W, 410W, 490W, 560W, 630W, 690W, 760W
- Power consumption @630W is 662W, 2.7A @230V
- Power consumption @boost 760W is 799W, 3.5A @230V
- System PPF @760W is 1,411µmol/s
- Illumination surface:
  @630W is min 0.84m² (9.04ft²), max 2m² (21.52ft²)
  @760W is min 1m² (10.76ft²), max. 2.4m² (25.83ft²)
- 50mm (2") connection for active extraction
- Dimensions 675x275x130mm (26.5"x10.8"x5.1")
- Weight 6.3kg (13.88lbs)

DIMLUX EXPERT SERIES MKII SPECIFICATIONS

DIMLUX EXPERT SERIES 600/750 Watt DXO MKII

Light Output PAR (PPF 400-700nm): 1506µmol/s @750W

Light Output PAR Total (PPF 350-800nm): 1657µmol/s @750W

- Available in 230V
- Lamp: Dimlux Xtreme Output HPS 400V 600/750W EL
- Dim levels: Soft-Off, 320W, 390W, 460W, 530W, 600W, 650W, 750W
- Power consumption @600W is 616W 2.7A at 230V
- Power consumption @boost750W is 770W, 3.4A at 230V

Photon Efficacy PAR (PPE 400-700nm): 1,94µmol/J @700-750W

Photon Efficacy PAR Total (PPE 350-800nm): 2,13µmol/J @700-750W

- Illumination surface:
  @600W = min. 0.78m² (8.39ft²), max. 2m² (21.52ft²)
  @750W = min. 0.95m² (10.22ft²), max 2.4m² (25.83ft²)
- 50mm (2") connection for active extraction
- Dimensions 550x275x130mm (21.6"x10.8"x5.1")
- Weight 5.1kg (11.24lbs)

DIMLUX EXPERT SERIES 1000 Watt DXO DE EL UHF MKII

Light Output PAR (PPF 400-700nm): 2558µmol/s @1200W

Light Output PAR Total (PPF 350-800nm): 2813µmol/s @1200W

- Available in 230V, 277V
- Lamp: Dimlux Xtreme Output HPS 400V 1000/1250W DE
- Dim levels: Soft-Off, 600W, 700W, 800W, 900W, 1000W, 1100W, 1200W
- Power consumption @1000W is1035W 4.5A at 230V
- Power consumption @boost1200W is 1242W, 5.4A at 230V

Photon Efficacy PAR (PPE 400-700nm): 2,07µmol/J @1150-1200W

Photon Efficacy PAR Total (PPE 350-800nm): 2,27µmol/J @1150-1200W

- Illumination surface:
  @1000W is min 1.4m² (15.06ft²), max 3.3m² (35.52ft²)
  @1200W is min 1.65m² (17.76ft²), max. 4m² (43.05ft²)
- 50mm (2") connection for active extraction
- Dimensions 625x275x130mm (24.6"x10.8"x5.1")
- Weight 6.3kg (13.88lbs)

DIMLUX EXPERT SERIES 1000/1250 Watt DXO CALI SPEC MKII

Light Output PAR (PPF 400-700nm): 2724µmol/s @1250W

Light Output PAR Total (PPF 350-800nm): 3008µmol/s @1250W

- Available in 230V, 277V
- Lamp: DXO California Spec 1250W 2780µmol/s 2.23µmol/J 400V DE
- Dim levels: Soft-Off, 600W, 700W, 800W, 900W, 1000W, 1100W, 1250W
- Power consumption @1000W is 1032W 4.5A at 230V
- Power consumption @boost1250W is 1290W, 5.2A at 230V

Photon Efficacy PAR (PPE 400-700nm): 2,12µmol/J @1150-1250W

Photon Efficacy PAR Total (PPE 350-800nm): 2,34µmol/J @1150-1250W

- Illumination surface
  @1000W is min 1.4m² (15.06ft²), max 3.3m² (35.52ft²)
  @1250W is min 1.65m² (17.76ft²), max. 4m² (43.05ft²)
- 50mm (2") connection for active extraction
- Dimensions 625x275x130mm (24.6"x10.8"x5.1")
- Weight 6.3kg (13.88lbs)

WHAT'S INCLUDED & COMPATIBLE BULBS

Unboxing

Your Dimlux fixture box will contain the following items:

1x Interlink cable *(315&600W=2.0m 630&1000W=2.5m)*
1x Power cord
2x Eye bolt and nut (M6)
1x Instruction manual

Extra Interlink cables are available in different sizes

0.6 m (24 in.)
1,0 m (40 in.)
1.5 m (60 in.)
2,0 m (80 in.)
2,5 m (100 in.)
3,5 m (140 in.)
5,0 m (200 in.)
10,0 m (400 in.)

Suitable lamps

⚠ Please ensure that the lamp has been burning for at least 5 minutes before turning off the power. Short ON/OFF cycles can shorten the lifespan of the installed 315W lamp.

Dimlux Expert 315 Watt (dual)

- Dimlux Daylight 3k AGRO
- Dimlux Daylight 4k

Please ensure that only Dimlux branded 315w lamps are used in these fixtures as any other brand is not fully compatible and may fail after a short time.

Dimlux Expert 600/750W EL UHF MKII

- Dimlux Xtreme Output HPS 400V 600/750W (2-79)

Dimlux Expert 1000 Watt EL UHF and the 1000/1250W MKII

- Horturion MH 1000 DE EL 5.5K (2-74)
- Dimlux Xtreme Output HPS 400V 1000/1250W DE (2-78)
- Dimlux Xtreme Output California Spec HPS 400V 1000/1250W DE (2-785)

Dimlux Xtreme Output - DXO

Designed to boost:

- Dimlux Xtreme Output HPS 400V 1000/1250W DE (2-78)
- Dimlux Xtreme Output HPS 400V 600/750W (2-79)

Designed to boost and ultimate performance:

- Dimlux Xtreme Output California Spec HPS 400V 1000/1250W DE (2-785)

Mounting

There are indicators on the top rail of each fixture to help you mount the supplied fixing brackets in the correct place. The image below shows the locations for each different fixture.

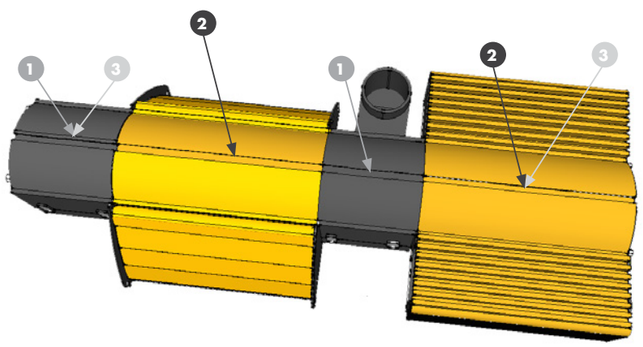

1 Ultra Optics Reflector
2 600/750W, 600W and 315W fixture
3 1000W/1250W, 1000W and 630W fixture

INSTALLATION

Installation Dimlux Expert Series MKII (without Maxi Controller)

If the fixture is not connected to a Maxi Controller or another fixture, the fixture will operate in "Free running" mode. By pressing the select button you can turn the lamp on and cycle through different powers.

The presets at 600/750W are:
OFF, 300 Watts, 360 Watts, 420 Watts, 480 Watts, 540 Watts, 600 Watts, 675 Watts, 750 Watts, ANA

The presets at 1000W are:
OFF, 500 Watts, 600 Watts, 700 Watts, 800 Watts, 900 Watts, 1000 Watts, 1100 Watts, 1200 Watts, ANA
In "Free running", the display shows the selected power of the fixture, or OFF if the ballast is off.

The presets at 1000/1250W are: OFF, 500 Watts, 600 Watts, 700 Watts, 800 Watts, 900 Watts, 1000 Watts, 1100 Watts, 1250 Watts, ANA In "Free running", the display shows the selected power of the fixture, or OFF if the ballast is off.

Installation with Maxicontroller

The Dimlux Expert series can be controlled with the Dimlux Maxi Controller or by using external switching gear (contactors, timers). Make sure that the contactors and timers are designed to match the load of the ballasts.

The Maxi Controller can control up to 160 Dimlux Expert fixtures at the same time. No longer needed are the switchboard, time delay timers,
timers and relays (contactors) are no longer needed. The power cables of the fixtures can be directly plugged into a power socket, after which they can be remote controlled. Light on and off times, brightness, and many more settings can be controlled with the Maxi Controller.

If a Maxi Controller is connected to the first fixture, the chain of fixtures will be in 'analog mode'. The power output and on/off state is controlled by the Maxi Controller. The user can still overrule the off state (but not the output power) of any fixture in a chain, by pressing the button. Using the button while a chain is in 'analog mode' only influences that fixture and not other fixtures in the same chain.

When the Maxi Controller sends an 'on' signal (for example 90%), and the fixture is not manually turned off, the display will first show "analog on" for a while, after which it will just show "on".

When the Maxi Controller sends an 'off' signal, or the fixture is manually turned off, the display will first show "analog off" for a while, after which it will just show "off".

⚠ MK-II ballast does not detect the Maxi Controller.

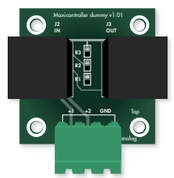

If you have a problem with the MKII ballasts or fixtures, it could be because you are using an old Maxi Controller. The internal hardware version must be 4.3 or higher. You can check this by removing the power from the Maxi Controller and switching it back on after 5 seconds and quickly checking what is in the display (e.g. Hw 4.3 Sw 3.0). If the hardware version is 4.3 it is not necessary to purchase a new Maxi Controller , if it says something other than 4.3, then another Maxi Controller must be purchased.

If you want to keep your old controller or use a different control system you can use the Maxi Controller Dummy Adapter which must be placed between the old Maxi Controller and the first ballast or fixture.

INSTALLATION

The Maxi Controller sends a signal to the fixtures to switch them on or off. There are 2 out ports on the Maxi Controller. Each port can switch up to 80 fixtures using the oem interlink cables and splitters. Interlink cables are available in different lengths.

Please refer to the Maxi Controller manual for specific settings information.

For up to 40 fixtures, connect OUT-1 to IN of the fixture

For more than 20 fixtures, it is recommended to divide equally between ports OUT-1 and OUT-2 (up to 80 fixtures)

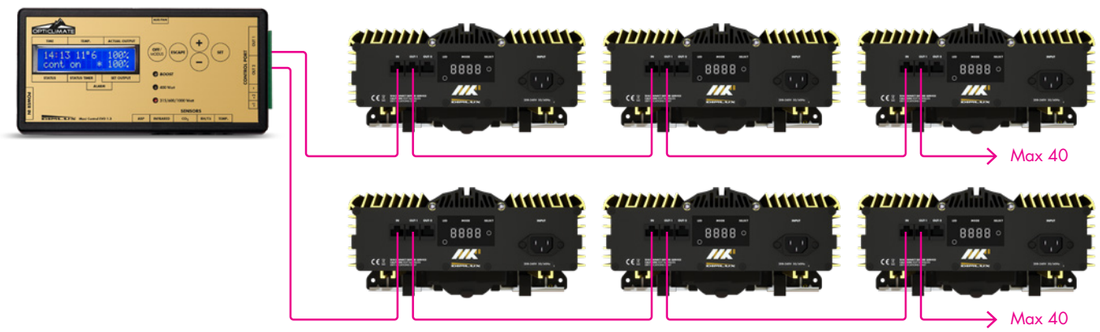

For more than 80 fixtures, use a splitter and divide equally between OUT-1 and OUT-2

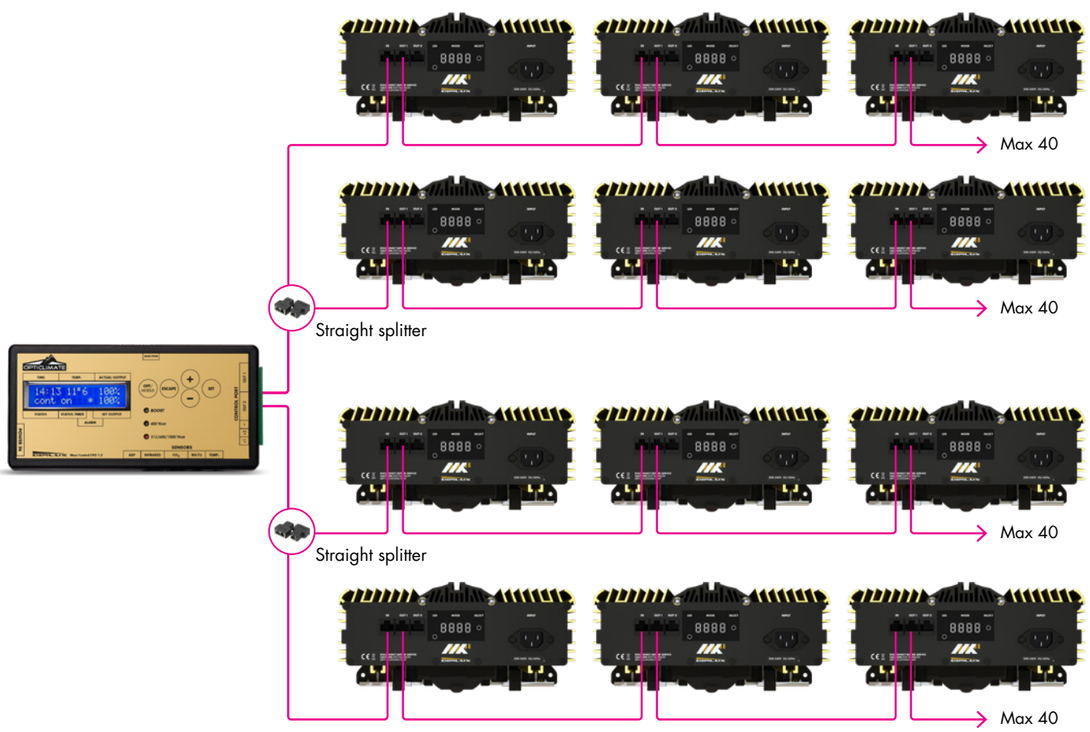

GENERAL USE

Air

The open reflector versions have holes in the top of the reflective portion where no direct light can shine through. By natural convection, the heat will escape through these holes and cool the lamp.

There is also a 50mm (2") port to connect active an air removal tube to reduce the room temperature. The amount of air extracted through the 50mm (2") connection must be 200 m3/hour (120cfm) for each lamp. This is the same for all models.

Additional 50mm tube and T-joints can be supplied. The T-joints are available in125-50-125mm (5"-2"-5"), 150-50-150mm (6"-2"-6"), and 200-50-200mm (8"-2"-8").

Boosting and Cooling

Boosting light output will increase the temperature of the lamp. The lamp openings in the reflector allow the lamp to operate at its optimum temperature. Without this passive cooling, the lamp efficiency would decrease. When hot air is actively extracted, the efficiency of the lamp will slightly increase.

Ultra Optics Reflector

The main goal in designing the Ultra Optics reflector was to achieve the highest efficiency (light output) possible. It's designed according to the SBCS (Single Bounce Clear Sight) principle which means that each light ray reflects at most a single time in the reflector (Single Bounce). After reflection, the beam is not hindered by the lamp or other parts (Clear Sight). The design of the reflector is optically perfect so that no hammered or textured pattern is needed to spread hotspots. Hammered or textured reflectors are made to improve uniformity, but create undesirable multiple reflections inside the reflector and cause internal reflections from the reflector to the lamp, causing a decrease in efficiency. The techniques used in our reflector combined with the use of Miro Silver mirror will provide unparalleled results.

Fixture Spacing

The spacing between fixtures depends on the lamp power, power setting, and type of crop. Most crops require at most 1500 µmol/m²/s of photosyntetic flux. The next table lists the minimum footprint size to obtain at most 1500 µmol/m²/s at the crops, for common power settings.

Power	Min footprint area for 1500 µmol/m²/s	Power	Min footprint area for 1500 µmol/m²/s
315W	0.41 m²	720W	0.94 m²
380W	0.49 m²	1000W	1.30 m²
600W	0.78 m²	1200W & 1200/1250W	1.56 m²

You can adjust these numbers for different power settings and for different desired flux at the crops, using this formula: area = power / 770 For example: 0.80 m² = 720W / 770

The number 770 is estimated from the expected light output of the lamp, with reflector and wall losses taken into account. Depending on your exact set-up, the actual number can be as low as 720, but rarely higher than 770. This formula is intended to give you the minimum area, hence we use 770.

Note that 1.3 m² is not the same as a square of 1.3 by 1.3 m. The latter is 1.3×1.3 = 1.69 m² in area.

The minimum area determines the distance between the fixtures, and therefore, the amount of fixtures needed to place in a multi-fixture growing room. For the calculation of how high your fixtures should be placed, see te next section.

GENERAL USE

Reflector Adjustment (only for the Ultra Optics Hybrid 98)

The Ultra Optics Hybrid 98 reflector has adjustable side-reflectors with 2 positions, a wide position and a deep position. The “wide” position gives an overlap in a multi reflector set-up. The footprint ratio is 0.8:1. When the reflector is next to walls or in a square one lamp room, the adjustable side-reflector should be set to the “deep” position, which gives a footprint image is 1:1.

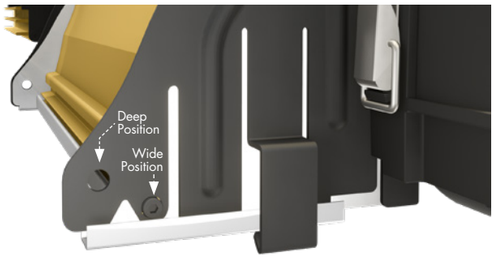

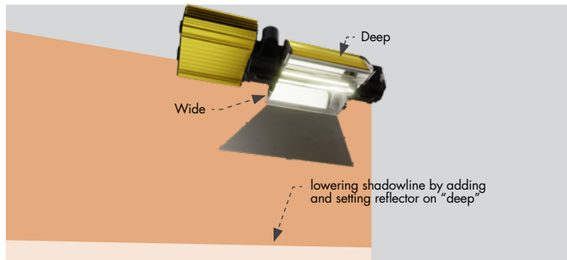

When the side-reflector is moved to the outer position, the reflector is in “deep” position, when moving the side-reflector towards the lamp, the reflector is in “wide” position.

Add-on reflectors (wings)

The full fixture or separate Ultra Optics reflector can be fitted with seperate wing add-on reflectors. The reflectors that are adjacent to a wall or corner can be equipped with these wings to minimise reflection losses at the wall. These wings have a hammered texture because the angle of reflection is so large that the SBCS principle is maintained. Reflectors next to a wall require one wing, reflectors in a corner can be fitted with 2 wings and reflectors in the middle of a room require no wings. Add-on reflectors minimize wall losses and give more light to the surroundings from the illuminated grid.

The add-on reflectors are available as overlapping and non overlapping models. The overlapping models are used in a multi row set-up and the non overlapping models are used when there is only one row of reflectors in the room.

How high?

There is a very simple and unique way to determine the minimum height of the reflector. Rule of thumb is that the shortest distance from reflector to crop is half the distance between the reflectors in a multi fixture set-up. It doesn't matter if the lamp is 400 Watt or 1000 Watt. A 1000 Watt lamp should illuminate a larger surface than a 400 Watt lamp, automatically increasing distance between reflector and crop.

A reflector hanging lower than calculated will increase hotspots and decrease uniformity. Lower is not better!

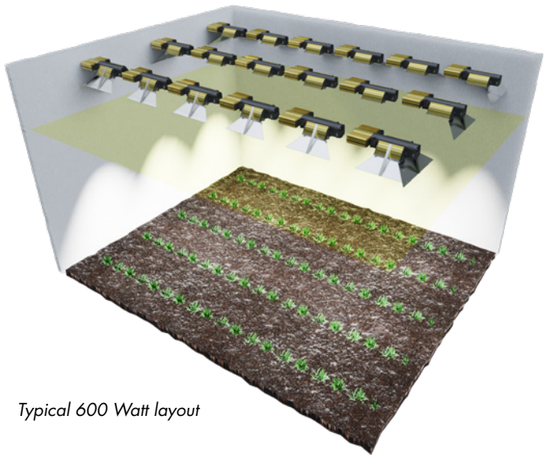

Typical 600 Watt layout

ERROR/STATUS MESSAGES

Display indication on Dimlux Expert 315W + 630W

Each Dimlux fixture has a self diagnosis system. The display on each unit shows error and status info.

Soft-off	On-DB	Off-Rem	On-Rem	Ignite	HVP	LVP	HTP	Open	Short	EOL
F-Flash	F-On	A-Flash	A-On	1-Strobo	2-On	3-On	4-On	5-On	6-On	7-On

Status

F-Flash = Soft off The ballast is off because the dim button is on soft-off.

F-on = On-DB The ballast is on, no Maxi Controller detected.
A-Flash = Off remote The ballast is off by Maxi Controller.
A-on = on remote The ballast is on by Maxi Controller.
1-strobo = Igniting The ballast is igniting the lamp.

Error
2-On = HVP The input voltage is too high.
3-On = LVP The input voltage is too low.
4-On = HTP The ballast is too hot.
5-On = Open Open contact or lamp failure.
6-On = Short Short in lamp circuit or lamp failure.
7-On = EOL End-of-life. Lamp surpassed it's service life. Maximum power connot be attained anymore.*

Display indication on Dimlux Expert MKII 600W + 1000W

If there is an error message, it will scroll across the display.

Here is a list of error and status displays explained.

Display: **PSU FAIL**
Meaning: No power HID PCB
Solution : **Return to Dealer**

Display: **HID FAIL**
Meaning: No communication to HID PCB
Solution : **Return to Dealer**

Display: **INITALISATION**
Meaning: Initalisation
Solution : **-**

Display: **SOFT OFF**
Meaning: Lamp off by button
Solution : **-**

Display: **ON ANALOG**
Meaning: Lamp on due exernal analog steering (Maxicontroller)
Solution : **-**

ERROR/STATUS MESSAGES

Display: **OFF ANALOG**
Meaning: Lamp off due exernal analog steering (Maxicontroller)
Solution : **-**

Display: **ON DIGITAL**
Meaning: Lamp on due digital ABP2 busprotocol
Solution : **-**

Display: **OFF DIGITAL**
Meaning: Lamp off due digital ABP2 busprotocol
Solution : **-**

Display: **ERROR DIGITAL LOST**
Meaning: Error, digital connection (ABP2) lost
Solution : **Connect RJ45 cables. Firmware error**

Display: **HVP ERROR HIGH VOLTAGE PROTECTION**
Meaning: High voltage error
Solution : **Mains voltage is to high**

Display: **LVP ERROR LOW VOLTAGE PROTECTION**
Meaning: Low voltage error
Solution : **Main voltage is to low, or HID PCB defective**

Display: **HTP ERROR HIGH TEMPERATURE PROTECTION**
Meaning: High temperature error
Solution : **Ballast is to hot**

Display: **OCP ERROR OPEN CONTACT**
Meaning: Open contact error
Solution : **Lamp not connected. Wiring to lamp broken. HID PCB broken**

Display: **SHORT ERROR SHORT CIRCUIT**
Meaning: Shortcut error
Solution : **Shortcut in lamp op lamphousing. Short between wires. HID PCB broken**

Display: **EOL ERROR END OF LIVE BULB**
Meaning: End of Life
Solution : **Replace LAMP. HID broken**

Display: **IGNITE**
Meaning: Ignite.
Solution : **Lamp will ignite.**

Display: **FREERUNNING 1000**
Meaning: freerunning 1000Watt
Solution : **-**

If there is a (mains) power failure (but the fixture is connected to other fixtures, "psu fail" will scroll across the display.
If there is an internal error in the electronics that drive the lamp, then "hid fail" will scroll across the display.

LAMP REPLACEMENT

Lamp replacement

Always wear gloves when replacing lamps to avoid leaving any residue on the new lamp which will affect performance

The Dimlux 315W CDM lamps have a bayonet connector. When installing a new lamp, ensure that the two pins, one large and one small, are lined up with the holes in the socket, then push and turn to lock the lamp in place.

The 1000W DE lamp has 2 wire clamps.

The 600W Dimlux fixtures use 600W lamps with E40 'screw in' sockets. Simply unscrew the old lamp and screw in the new one, making sure that it is screwed in tight and straight to avoid any performance issues.

A visual step-by-step lamp replacement guide is provided on the next page.

LAMP REPLACEMENT 1000W

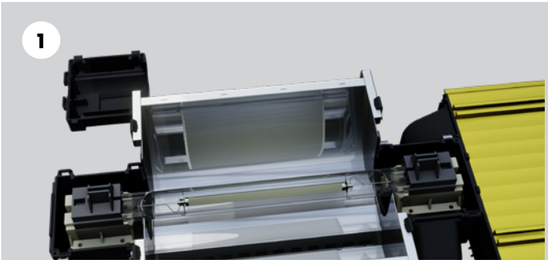

unlatch and unscrew both covers to expose lamp fittings

Slide both fittings fully open, as shown

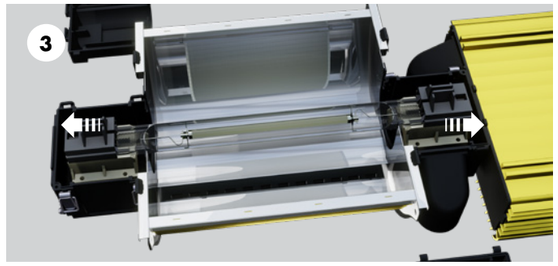

Make sure both sliders are in the fully-open position.

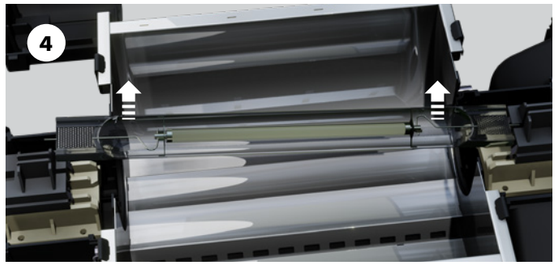

Remove the lamp

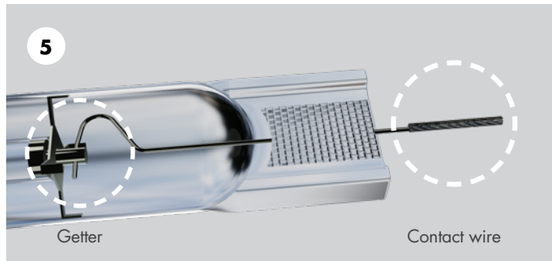

Before placing the new lamp, make sure the contact wire is straight, the getter is on the ballast side, and the text on the lamp is facing out.

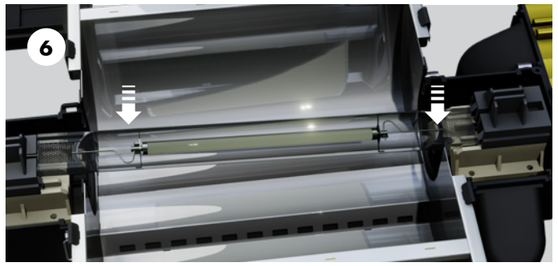

Insert lamp and push into place

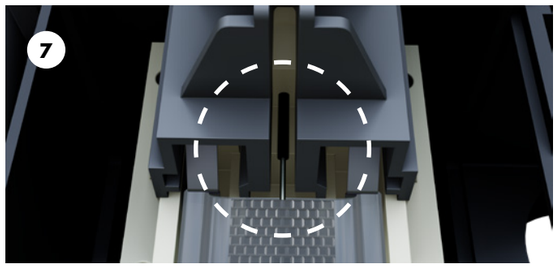

Make sure the contact wire from the lamp is straight between the contact plates inside the fitting

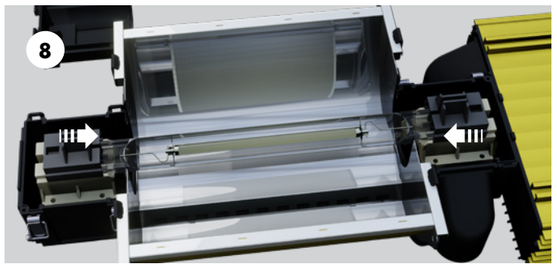

Slide the fittings firmly inwards

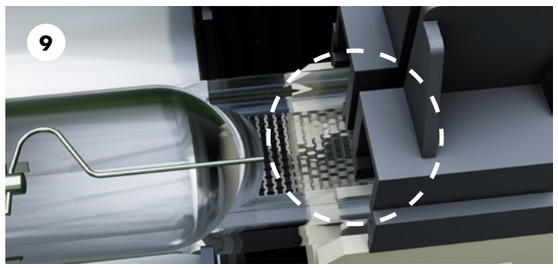

Make sure the fitting is fully closed

10

TEST THE COMPLETE FIXTURE

REFLECTOR REPLACEMENT

1

REMOVE LAMP(S) BEFORE REPLACEMENT

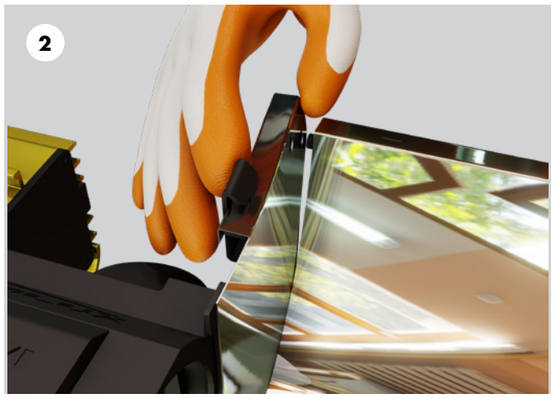

Open reflector fully

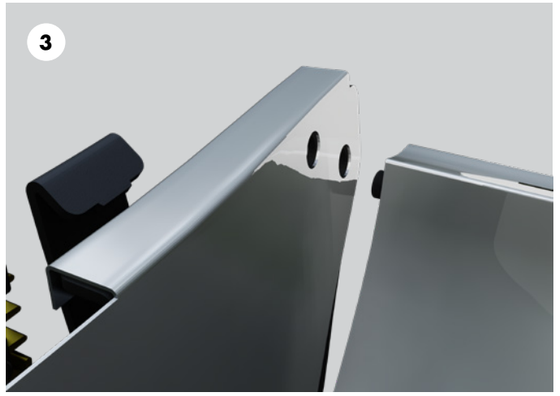

Open reflector fully

Pry open reflector edge from casing using a spudger tool

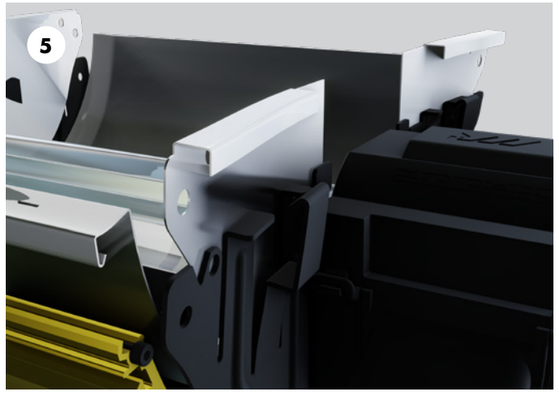

Lift reflector up and remove

6 Discard reflector

7 Insert new reflector in reverse order

9 Insert bulb and test.

Always dispose of old reflectors, do not re-use, as performance will be severely affected.

NOTES

NOTES

DIMLUX

ULTRA optics reflectors

EXPERT SERIES/MKII

DIMLUX

USER MANUAL

Engineered, Designed & Produced
in Holland

® DimLux is a registered trademark of
airsupplies

www.dimlux.nl
Manual version 12 13 2022